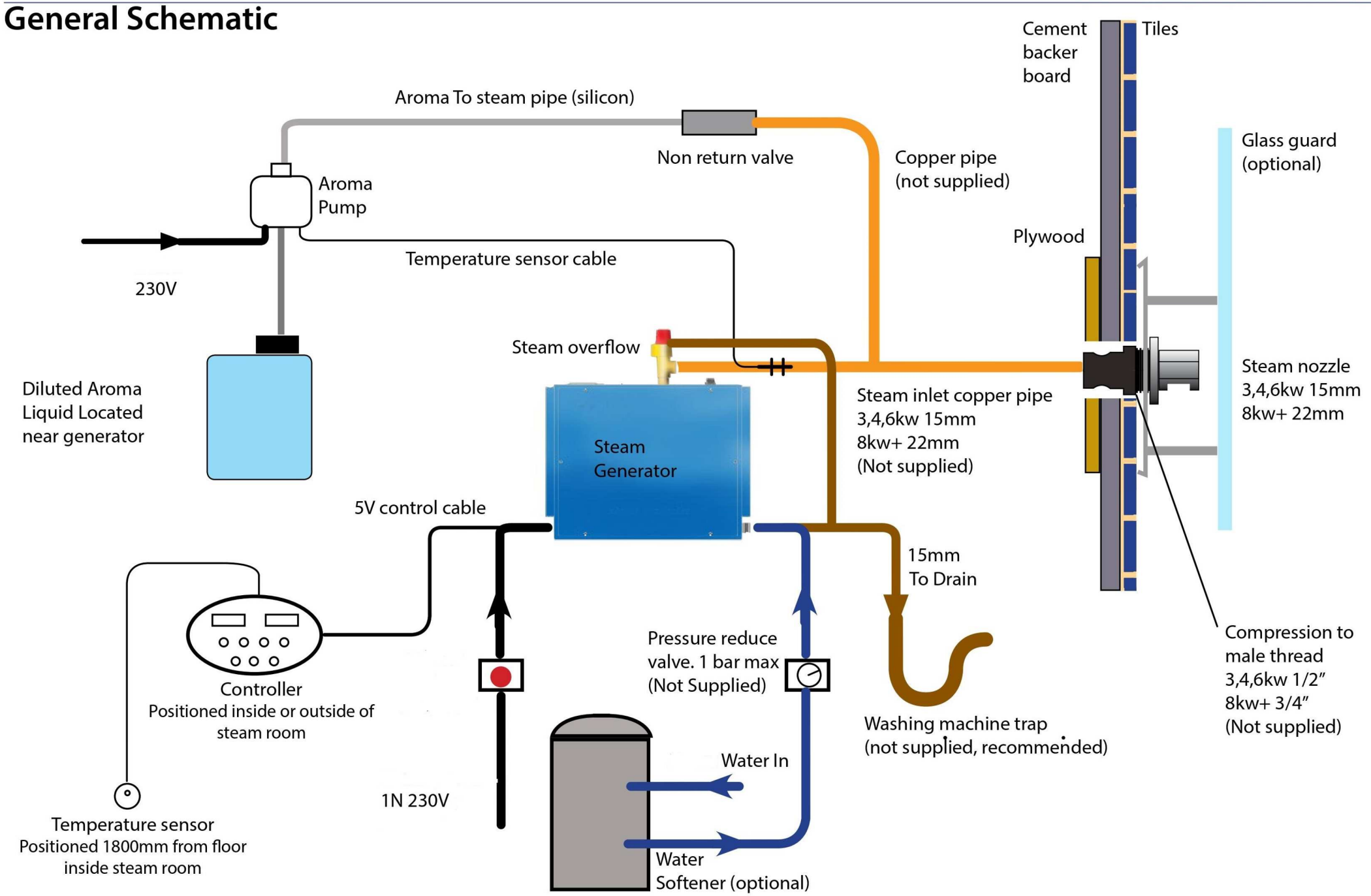General Schematic